'25/04/03 出図 RELEASE COPYING PROHIBITED 複写厳禁 UNCONTROL DRAWING 非管理図面
SWS/営･営業企画部 SWS/Sales & Marketing Planning Department

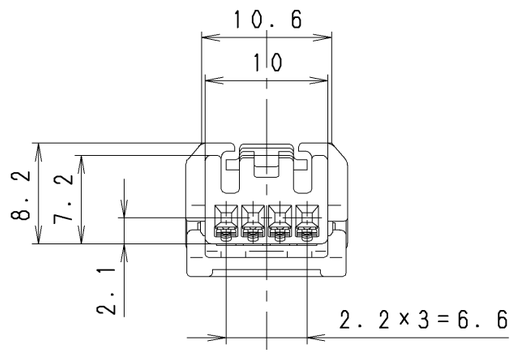

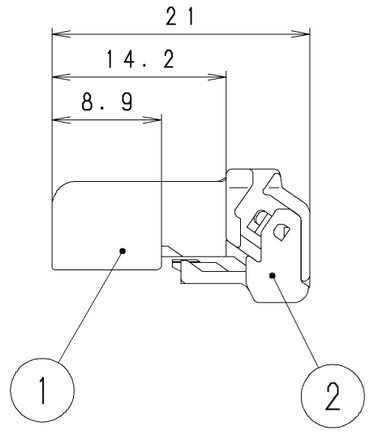

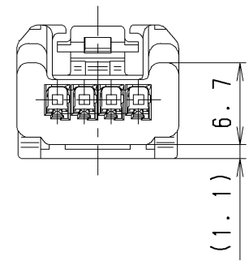

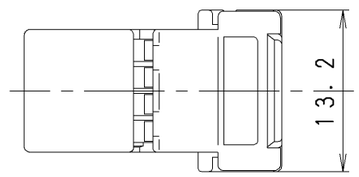

	4-WAY HE025 FEMALE HOUSING ASSY		PBT		6098-6569	HE02 4F-DGR
2	4-WAY HE025 FEMALE RETAINER		PBT	DARK GRAY		
1	4-WAY HE025 FEMALE HOUSING		PBT	DARK GRAY		
	4-WAY HE025 FEMALE HOUSING ASSY		PBT		6098-6201	HE02 4F-G
2	4-WAY HE025 FEMALE RETAINER		PBT	GREEN		
1	4-WAY HE025 FEMALE HOUSING		PBT	GREEN		
	4-WAY HE025 FEMALE HOUSING ASSY		PBT		6098-5317	HE02 4F-BR
2	4-WAY HE025 FEMALE RETAINER		PBT	BROWN		
1	4-WAY HE025 FEMALE HOUSING		PBT	BROWN		
	4-WAY HE025 FEMALE HOUSING ASSY		PBT		6098-5090	HE02 4F-L
2	4-WAY HE025 FEMALE RETAINER		PBT	BLUE		
1	4-WAY HE025 FEMALE HOUSING		PBT	BLUE		
	4-WAY HE025 FEMALE HOUSING ASSY		PBT		6098-4978	HE02 4F-NA
2	4-WAY HE025 FEMALE RETAINER		PBT	NATURAL		
1	4-WAY HE025 FEMALE HOUSING		PBT	NATURAL		
符号 ISS.	名称 DESCRIPTION	数量 QTY	材質 MATERIAL	色相 COLOR	部品番号 PART NO.	登録名称 PART NAME

一般公差表 GENERAL TOLERANCES		
以上 OR OVER	未満 LESS THAN	
	10	±0.3
10	50	±0.5
角度 ANGLE		

材質 MATERIAL 上表 SEE TABLE ABOVE	板厚 THICKNESS
仕上 FINISH	尺度 SCALE 2/1
色相 COLOR 上表 SEE TABLE ABOVE	質量 MASS 1.3g

承認 APPROVED	検図 CHECKED	設計 DESIGNED	製図 DRAWN
'10.04.06 Y.Fukatsu	'10.04.05 S.Iihoshi	2004/10/01 M.HORIUCHI	2010/03/30 S.KIDA

三角法 THIRD ANGLE PROJECTION

登録名称 PART NAME	上表 (SEE TABLE ABOVE)
管理番号 REFERENCE NO.	S 7 3 0 8 8 6
部品番号 PART NO.	上表 (SEE TABLE ABOVE)
名称 DESCRIPTION	上表 (SEE TABLE ABOVE)

Sumitomo Wiring Systems, Ltd. A3

開企 008C-9

'25/04/03 出図 RELEASE COPYING PROHIBITED 複写厳禁 UNCONTROL DRAWING 非管理図面
SWS/営･営業企画部 SWS/Sales & Marketing Planning Department

UCS047N01